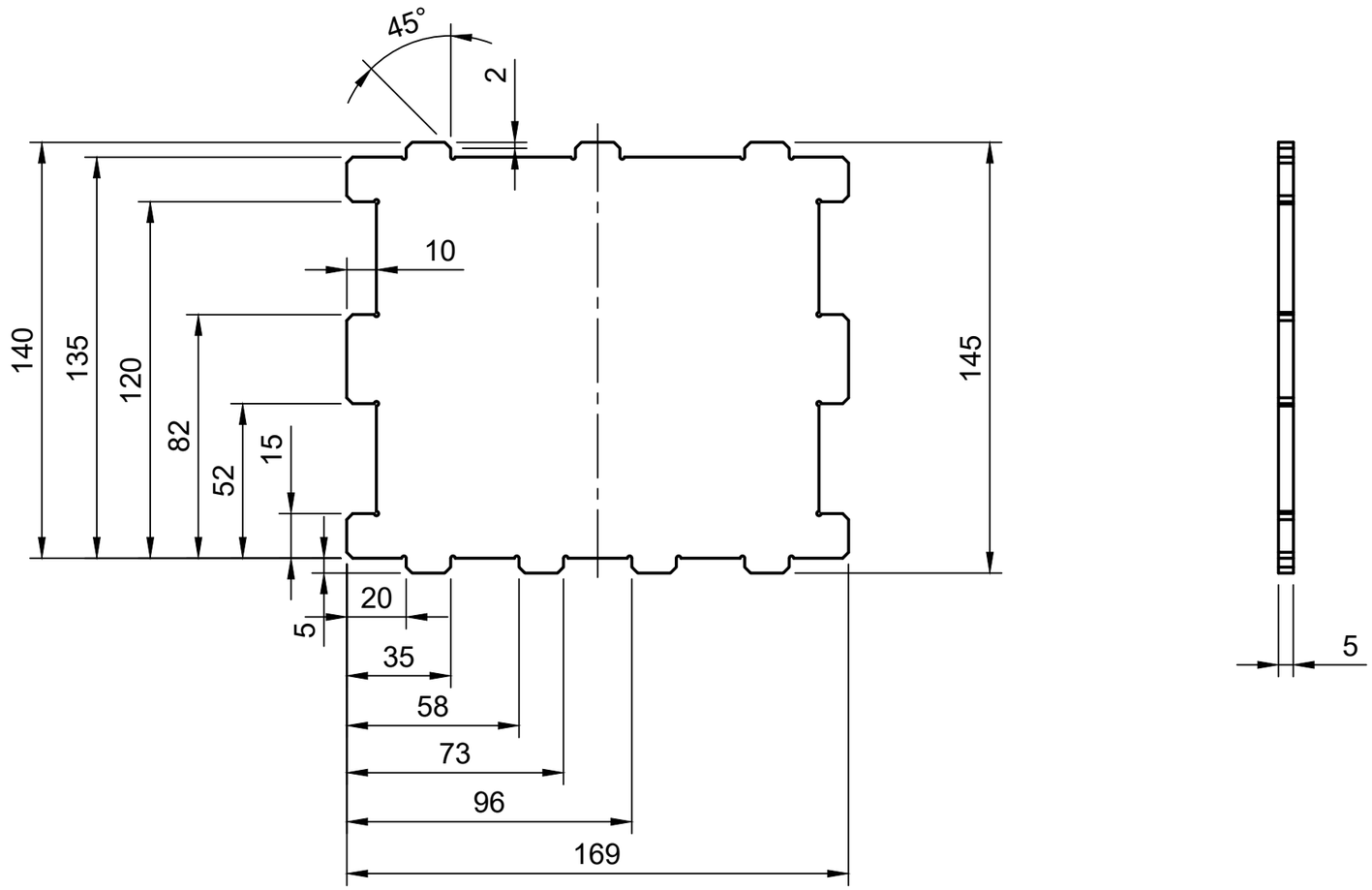

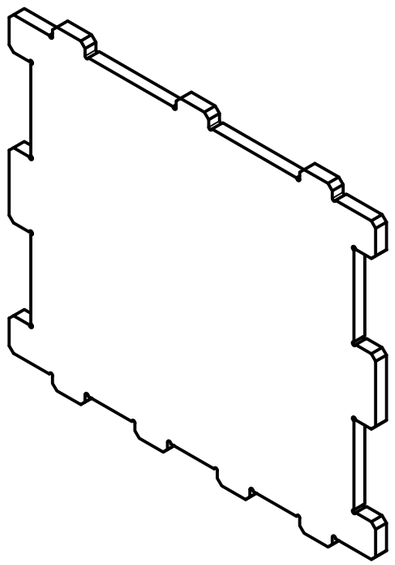

Surface: Ra 6,3 | Deburring edges
Note laser file! (Box plate 2 - 5 mm - x2.dxf)

Weight 0,85 kg	Material Steel - S235				
Machine Shredder Basic	Description Box plate 2 - 5 mm - x2				
Projection method First angle	Release date 27.05.2021	Drawing no. SHR-3 1100.02-2			Rev. A
General tolerances ISO 2768-m	Doc. type Part	Units unless specified mm	Sheet size A3	Scale 1:2	Sheet 1/1